YINGJIAO®

YDD120 SERIES 120W



CE UKCA RoHS

YDD series is a DIN Rail type DC-DC converter with main features including DIN rail-type easy installation, utra slim width (32mm), wide input voltage, fanless design, -40-+70C wide operating temperature, 4KVDC I/O isolation, 150% peak load, adjustable output voltage and full protective functions.
Suitable applications include DC buck/boost regulator, industrial,security control, communication system and other fields.Increasing system insulation level and voltage drop compensation along cable...etc.

Features

- DC Output Adjustable
- 4KVdc I/O isolation(Reinforced isolation)
- 150% peak load capability
- -40~+70℃ wide working temperature
- Protection:Short circuit /Overload Over Voltage/Input reverse polarity / Input under voltage protection
- Three Years Warranty

YINGJIAO®

Model Information

Yingjiao Part Number	DC Voltage	Rated Current	Rated Power	CURRENT RANGE	VOLTAGE ADJ.RANGE
YDD120-B12	12V	10A	120W	0~10A	9~14V
YDD120-B24	24V	5A	120W	0~5A	24~28V
YDD120-B48	48V	2.5A	120W	0~2.5A	48~56V

Model Encoding

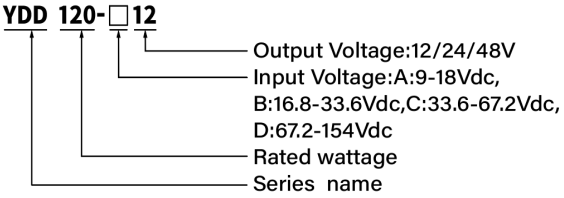

Input

VOLTAGE RANGE	16.8~33.6V @ YDD120-B(12/24/48)
FREQUENCY RANGE	89% @ YDD120-B12
	89.5% @ YDD120-B24
	91% @ YDD120-B48
DC CURRENT(Typ.)	5.6A @ YDD120-B(12/24/48)
INRUSH CURRENT(Typ.)	5A @ YDD120-B(12/24/48)
INTERRUPTION OF VOLTAGE SUPPLY	EN50155:2007-comply with S1 level(6ms) @ full load,
	S2 level(10ms) @70%load, EN50155:2017-comply with S1 level

Output

PEAK CURRENT	15A @ YDD120-B12
	7.5A @ YDD120-B24
	3.75A @ YDD120-B48
PEAK POWER	180W (3sec.)
RIPPLE & NOSE(max.)	50mVp-p @ YDD120-B(12/24/48)
VOLTAGE TOLERANCE	±1.0%
LINE REGULATION	±0.5%
LOAD REGULATION	±1.0%
SETUP,RISE TIME	500ms, 60ms at full load
HOLD UP TIME (Typ.)	10ms at 70% load

Protection

OVER LOAD	105%-135% Rated Output Power
	Protection Type: Recovers automaticallyafter fault condition is removed
OVER VOLTAGE	YDD120-B12 : 14.4~16.8VDC
	YDD120-B24 : 28.8~33.6VDC
	YDD120-B48 : 57.6~67.2VDC
	Protection Type : Shut down O/P voltage, re-power on to recover
REVERSE POLARITY	Protection Type : Abnormal conditions can be automatically
	restored through MOSFET after removal，The MOSFET is intact
UNDER VOLTAGE LOCKOUT	12Vin (B-type) :Power ON≥16.8V, OFF≤16.5V @YDD120-B(12/24/48)

Environment

WORKING TEMP.	-40 ℃ to +70 ℃ (Refer to "Derating Curve")
Working Humidity	5 ~ 95% RH Non-Condensing
STORAGE TEMP, HUMIDITY	-40 ℃ to +85 ℃，5~95% RH Non-Condensing
TEMP. COEFFICIENT	± 0.03%/℃(0~55℃)
VIBRATION	Component:10 ~ 500Hz, 5G 10min./1cycle, 60min. each along X, Y, Z axe
	Mounting: Compliance to IEC61373
OPERATING ALTITUDE	5000 meters
MTBF	214.5K hrs min. MIL-HDBK-217F (25℃)

SAFETY

SAFETY STANDARDS	IEC62368-1, UL62368-1
	EAC TP TC 004, AS/NZS 62368.1 approved
WITHSTAND VOLTAGE	I/P-O/P:4KVDC I/P-FG:2.5KVDC O/P-FG:2.5KVDC
ISOLATION RESISTANCE	I/P-O/P, I/P-FG, O/P-FG: > 100M Ohms/ 500VDC/25℃/70% RH

EMC

EMC EMISSION	Parameter	Standard	Test Level/Note
	Conducted	BS EN/EN55032	CLASS B
	Radiated	BS EN/EN55032	CLASS B
	Voltage Flicker	BS EN/EN61000-3-3	.....
	Harmonic Current	.....	.....
EMC IMMUNITY	BS EN/EN55035, BS EN/EN61000-6-2(BS EN/EN50082-2)		
	Parameter	Standard	Test Level/Note
	ESD	BS EN/EN61000-4-2	Level 3, 8KV air; Level 3, 6KV contact, criteria A
	Radiated	BS EN/EN61000-4-3	Level 3, 10V/m; criteria A
	EFT/Burest	BS EN/EN61000-4-4	Level 3, 2KV; criteria A
	Surge	BS EN/EN61000-4-5	Level 3, 1KV/L-L; Level 3, 2KV/L-L-FG; criteria A
	Conducted	BS EN/EN61000-4-6	Level 3, 10V; criteria A
	Magnetic Field	BS EN/EN61000-4-8	Level 4, 30A/m; criteria A
RAILWAY STANDARD	Compliance to BS EN/EN45545-2 for fire protection; Meet BS EN/EN50155/IEC60571 including IEC61373 for shock & vibration, BS EN/EN50121-3-2 for EMC(except for 9~18Vin)		

Note

1.All parameters NOT specially mentioned are measured at normal input, rated load and 25℃ of ambient temperature.

2.Ripple & noise are measured at 20MHz of bandwidth by using a 12" twisted pair-wire terminated with a 0.1uf & 47uf parallel capacitor.

3.Tolerance : includes set up tolerance, line regulation and load regulation.

5.Derating may be needed under low input voltage. Please check the derating curve for more details.

6.The power supply is considered as an independent unit, but the final equipment still need to re-confirm that the whole system complies with the EMC directives. For guidance on how to perform these EMC tests. please refer to "EMI testing of component power supplies."

7.The ambient temperature derating of 3.5°C/1000m with fanless models and of 5C/1000m with fan models for operating altitude higher than 2000m(6500ft).

Dimensions & Weight

Length:	32mm/1.25in
Width:	125.5mm/4.94in
Height:	97.3mm/3.83n
Weight:	500g

Packing

Carton Size:	52.5 x 33 x 17.5 CM
	20.67 x 12.99 x 6.89 in
Master Carton Quantities:	10pcs/Carton

Dimensions and Installation

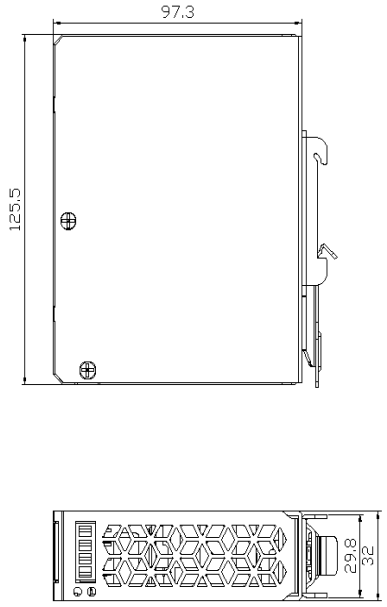

AC Input Terminal (TB1) pin NO. Assignment

Pin No.	Assignment
1	FG
2	-V
3	+V

DC Output Terminal (TB2) pin NO. Assignmen

Pin No.	Assignment
1,2	-V
3,4	+V

Installation Instruction

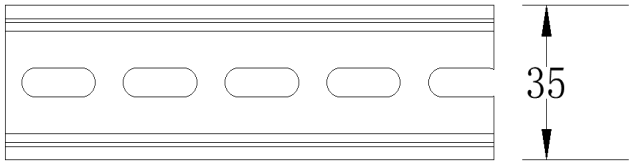

ADMISSIBLE DIN-RAIL:TS35/7.5 OR TS35/15

(For reference only. Not included with unit.)

Block Diagram

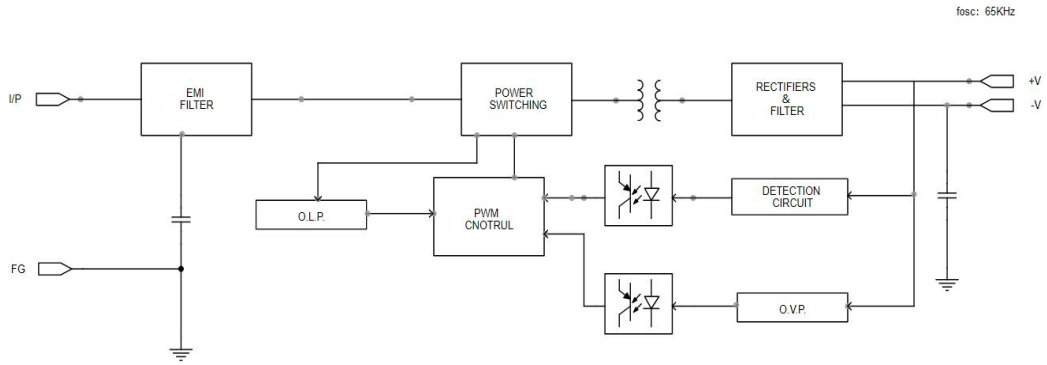

Derating Curve

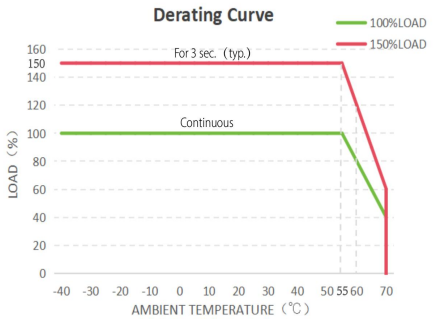

Output derating VS input voltage

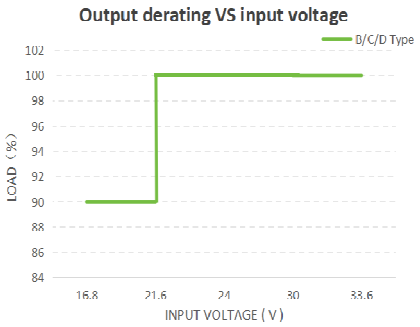

Peak Loading

(1)

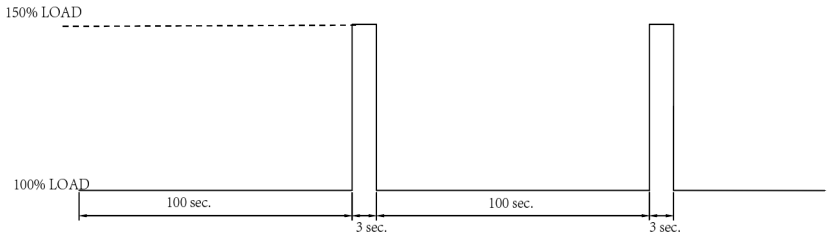

(2)

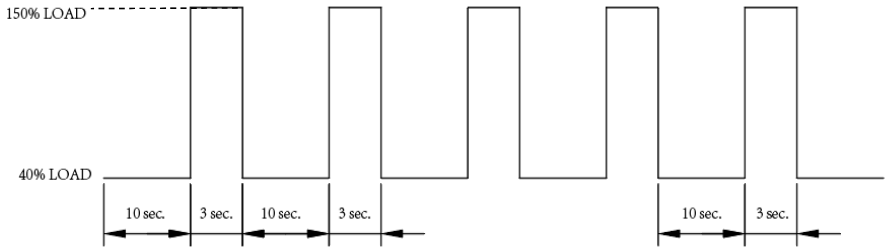

Input Fuse

There is a fuse connected in series to the positive input line, which is used to protect against abnormal surge.
Fuse specifications of each model are shown as below.

Type	Fuse Type	Reference and Rating
A	Time Lag	Conquer MST 10A 250V*2
B	Time Lag	Conquer MST 8A 250V*2
C	Time Lag	Conquer MST 8A 250V*2
D	Time Lag	Conquer MST 4A 250V*2

Input Under-Voltage Protection

If input voltage drops below Vimin, the internal control IC shuts down and there is no output voltage. It recovers automatically when input voltage reaches above Vimin,please refer to the cruve below.

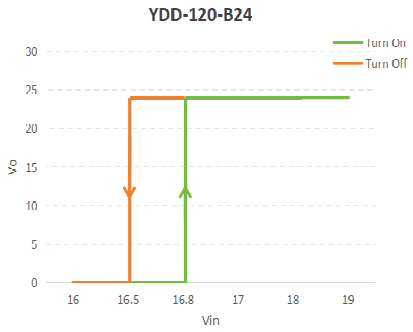

Input Reverse Polarity Protection

There is a MOSFET connected in series to the negative input line. If the input polarity is connected reversely, the MOSFET opens and there will be no output to protect the unit.

Input Range and Transient Ability

The series has a wide range input capability. With-30%/+40% of rated input voltage(except A Type), it can withstand that for 1 second.

INRUSH CURRENT

Inrush current is suppressed by a current limit circuit during the initial start-up,and then the circuit is bypassed by a MOSFET to reduce power consumption after accomplishing the start-up.

